TRIANGO 100 C Duo

TECHNICAL DATA

FITTED WITH	1 × LED module
LUMINOUS POWER	2 × 100 000 lux / 1.0 m *
COLOR RENDERING INDEX	Ra > 96
DEPTH OF ILLUMINATION	80 cm
OPERATION EQUIPMENT	Electronic converter
CORD LENGTH	Direct power supply
LUMINAIRE BODY	Polyamide (PA)
WEIGHT (NET)	30 kg (DUO total)
POWER CONSUMPTION	2 × 40 W
RATED CONNECTION VOLTAGE	100 - 240 V
FREQUENCY RANGE	50 / 60 Hz
USAGE	Touch panel on cardanic system
TECHNOLOGY	Single-pole secondary
BALANCE OF ARTICULATION JOINTS	Spring (weight compensation)
CLASS OF PROTECTION	I
PROTECTION RATING	According to IEC 60529 IP 20 luminaire head IP 43 (horizontal position)
STANDARDS MET	EN 60601-1, EN 60601-2-41
SPECIAL FEATURES	Diamond optics, sterilizable handle, high quality arm system, 4-step dimmable (100% / 80% / 60% / 40%) *
MOUNTING	Ceiling mount, ceiling tube can be cut on site (length: 25-120 cm)
ACCESSORIES	Sterilizable handle, handle cover, intermediate ceiling adapter

TREATMENT LIGHT

	lighting field / 1.0 m fixed value 18 cm	lighting field / 1.0 m changeable value 18 / 23 / 28 cm	color temperature fixed value 4300 K *	color temperature changeable value 3700 / 4300 / 4700 K *	dimmable	**Order No.**
TRIANGO 100-1 C Duo	x		x		x	D16.201.000-00811242
TRIANGO Fokus 100-3 C Duo		x		x	x	D16.202.000-00811330

LIGHT DISTRIBUTION

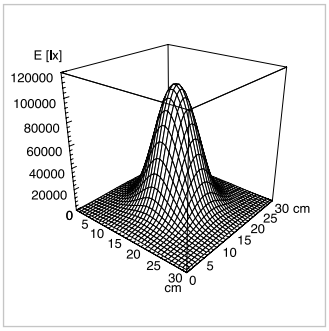

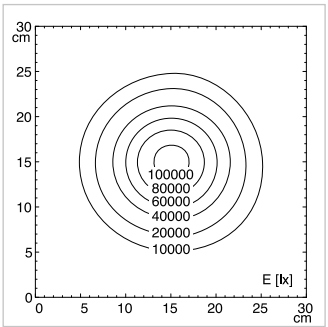

valid for Triango 100 with fixed lighting field / per luminaire head

TECHNICAL DRAWING

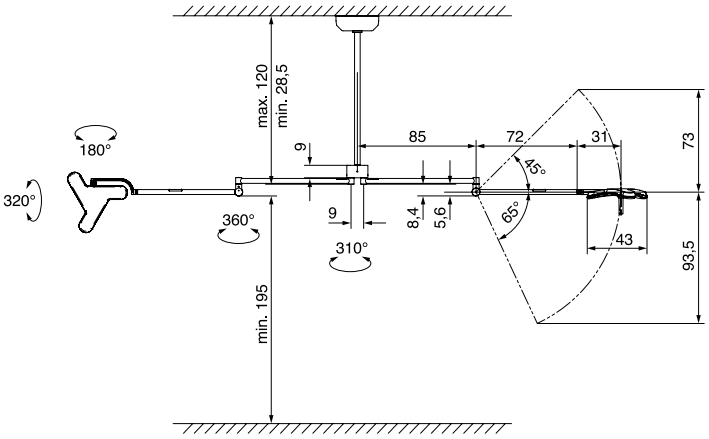

measurements in centimeters * -10% / +20% tolerance